CYPRESS

EMBEDDED SYSTEMS

Power Monitor
LED Driver Board

DRAWING NOTES:

Refer to specification 10002-DR-001-00

To be read in conjunction with drawing set 10002-SCH-002-xx BRN404x Carrier Board.

REV	REVISION DESCRIPTION	DATE
0	AS BUILT	03/10/2025
1	CORRECTIONS TO DRIVER CIRCUIT AND WIRING	04/25/2025

Cypress Embedded Systems
1 Cypress Street, Toronto, Ontario

This drawing and the information contained therein is confidential and the property of Cypress Embedded Systems. No use of, disclosure of this drawing, or the information contained therein shall be made without the written permission of Cypress Embedded Systems.

TITLE:
Power Monitor
LED Driver Board
Title Page

DRAWN BY: MIKE MCMAHON, LEL

DWG NUMBER: 10002-SCH-001-01 REV 1

DATE: 2025-05-27 2:20 PM

Drawing No.	Drawing Title	Revision
10002-SCH-001-01	TITLE PAGE	1
10002-SCH-001-02	DRAWING LIST	1
10002-SCH-001-03	LED DRIVER CIRCUIT	1
10002-SCH-001-04	BILL OF MATERIALS	1

DRAWING NOTES:

Refer to specification 10002-DR-001-00

To be read in conjunction with drawing set 10002-SCH-002-xx BRN404x Carrier Board.

REV	REVISION DESCRIPTION	DATE
0	AS BUILT	03/10/2025
1	CORRECTIONS TO DRIVER CIRCUIT AND WIRING	04/25/2025

Cypress Embedded Systems
1 Cypress Street, Toronto, Ontario

This drawing and the information contained therein is confidential and the property of Cypress Embedded Systems. No use of, disclosure of this drawing, or the information contained therein shall be made without the written permission of Cypress Embedded Systems.

TITLE:

Power Monitor
LED Driver Board
Drawing List

DRAWN BY: MIKE MCMAHON, LEL

DWG NUMBER: 10002-SCH-001-02 REV 1

DATE: 2025-05-27 2:20 PM

JST Connector pinout:

Pin#	Function
1	DC Common
2	D2 On AC Power
3	D3 On Battery Power
4	D4 Battery Charged
5	D5 Battery Charging
6	D6 Battery Fault
7	D7 Cellular Connected
8	D8 Cellular Searching
9	3.3Vdc

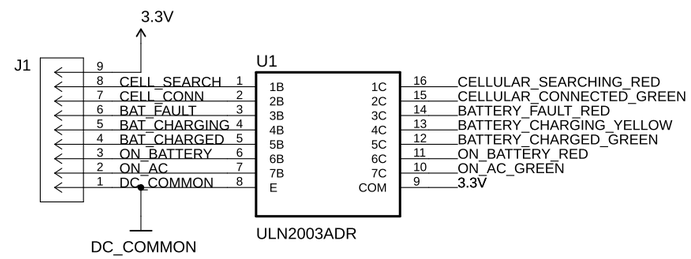

NOTE: DC Common is shown for reference only.

INDICATOR LEGEND:

POWER SOURCE:
GREEN (SOLID) = On AC Voltage Power Supply
RED (SOLID) = On Battery, Lost AC Voltage

BATTERY STATUS:
GREEN (SOLID) = Battery is fully charged
YELLOW (FLASHING) = Battery is charging
RED (SOLID) = Battery Fault State

CELLULAR STATUS:
GREEN (SOLID) = Cellular is connected
RED (FLASHING) = Cellular is searching for connection

Battery faults include: Battery Unknown State, Battery Disconnected, Battery Not Charging, or Battery Fault.

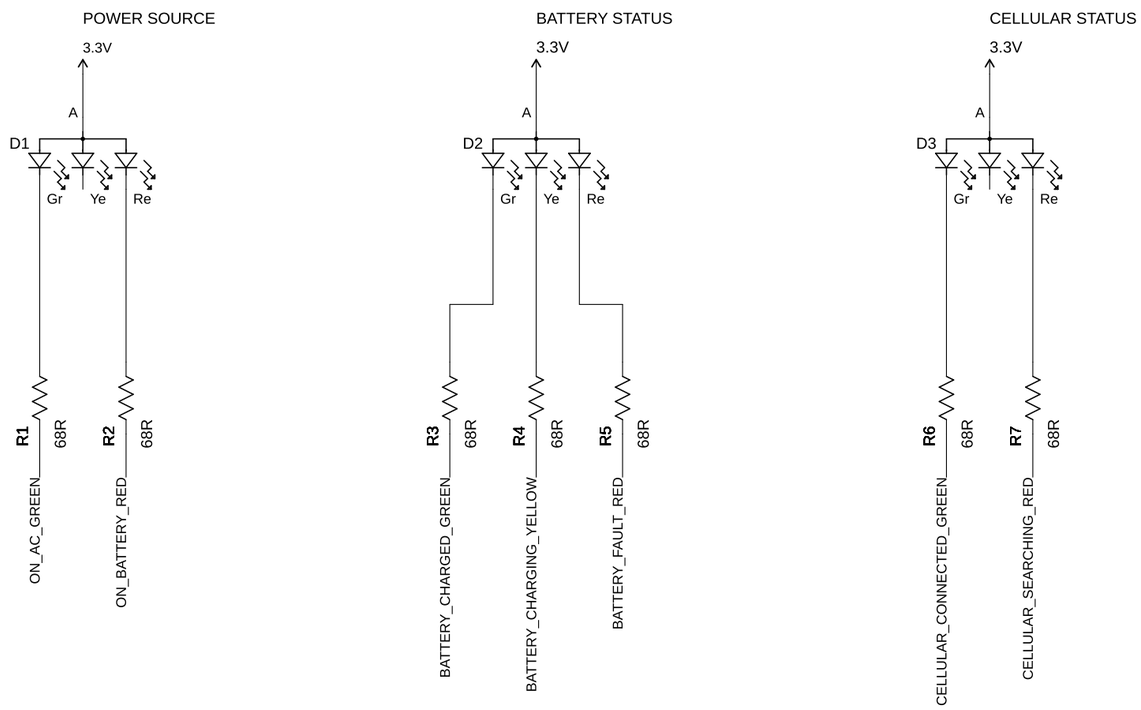

NOTE: D1, D2, D3 Forward Voltage Vf = 1.9Vdc

Iforward 20.58mA allowing approximately 100% full luminous intensity.

SMTL4-RGY typical Luminous Intensity at 20mA (25 degress C) (+/- 10%):
Red = 36.0 mcd
Green = 28.5 mcd
Yellow = 14.5 mcd

DRAWING NOTES:

Refer to specification 10002-DR-001-00

To be read in conjunction with drawing set 10002-SCH-002-xx BRN404x Carrier Board.

REV	REVISION DESCRIPTION	DATE
0	AS BUILT	03/10/2025
1	CORRECTIONS TO DRIVER CIRCUIT AND WIRING	04/25/2025

Cypress Embedded Systems
1 Cypress Street, Toronto, Ontario

This drawing and the information contained therein is confidential and the property of Cypress Embedded Systems. No use of, disclosure of this drawing, or the information contained therein shall be made without the written permission of Cypress Embedded Systems.

TITLE:
Power Monitor
LED Driver Board
LED Driver Circuit

DRAWN BY: MIKE MCMAHON, LEL

DWG NUMBER: 10002-SCH-001-03 REV 1

DATE: 2025-05-27 2:20 PM

Item	Qty	Reference	Manufacturer	Part Number	Description
1	3	D1, D2, D3	BIVAR INC.	SMTL4-RGY	LED GREEN/RED/YL CLR 4-PLCC SMD
2	3	D1, D2, D3	BIVAR INC.	VLP-550-R	CLEAR VERTICAL LIGHT PIPE, 11.3mm ROUND
3	1	J1	JST SALES AMERICA INC.	B09B-PASK-1	CONN HEADER VERT 9POS 2MM
4	1	J1	JST SALES AMERICA INC.	PAP-09V-S	CONN RCPT HSG 9POS 2.00MM
5	9	J1	JST SALES AMERICA INC.	SPHP-002T-P0.5	CONN SOCKET 24-28AWG CRIMP TIN
6	7	R1 -R7	VISHAY DALE	RCS060368R0FKEA	RES SMD 68 OHM 1% 1/4W 0603
7	1	U1	TEXAS INSTRUMENTS	ULN2003ADR	IC PWR RELAY 7NPN 1:1 16SOIC

DRAWING NOTES:

Refer to specification 10002-DR-001-00

To be read in conjunction with drawing set 10002-SCH-002-xx BRN404x Carrier Board.

REV	REVISION DESCRIPTION	DATE
0	AS BUILT	03/10/2025
1	CORRECTIONS TO DRIVER CIRCUIT AND WIRING	04/25/2025

Cypress Embedded Systems
1 Cypress Street, Toronto, Ontario

This drawing and the information contained therein is confidential and the property of Cypress Embedded Systems. No use of, disclosure of this drawing, or the information contained therein shall be made without the written permission of Cypress Embedded Systems.

TITLE:

Power Monitor
LED Driver Board
Bill of Material

DRAWN BY: MIKE MCMAHON, LEL

DWG NUMBER: 10002-SCH-001-04 REV 1

DATE: 2025-05-27 2:20 PM